Rotary cam switches

BSW 816-203-03L3-PA
Order Code: BSW0053

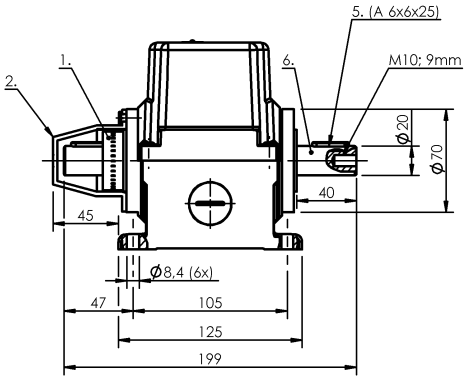

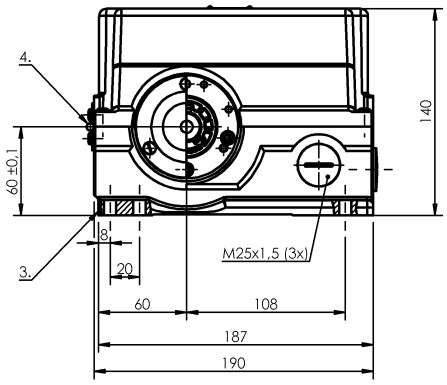

1) Scale ring, 2) Cover, 3) Reference edge, 4) Hinge, 5) Feather key, 6) Drive right-side

Basic features

Approval/Conformity	CE UKCA CCC WEEE
Basic standard	IEC 60947-5-2
Operating principle	1. Switch position: Inductive with cam ring
Version	Inductive

Electrical connection

Connection type	1. Switch position: Cable fitting via threaded insert

Electrical data

Cable entries, number	3 threaded exit M25
Continuous current	1-3. Switch position: 0.2 A
Rated operating voltage Ue	1-3. Switch position: 24 V DC
Speed max.	700 1/min
Speed monitor	None

Environmental conditions

Ambient temperature	-5...80 °C
IP rating	IP65

Functional safety

BG certified	no
MTTF (40 °C)	BES 517-110: 490 a

Material

Housing material	Aluminium, Anodized
Housing material, surface protection	Anodized

Mechanical data

Cam rings	1-3. Switch position: 180°
Connection cross-section	1.5 mm²
Drive shaft, length	40.00 mm
Drive type	right
Minimum torque	0.5 Nm
Mounting hold spacing B	105.0 mm
Rotation direction monitoring	no
Switching element	1-3. Switch position: BES 517-110
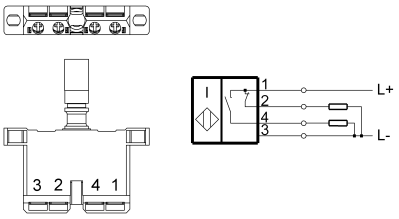
Wiring Diagrams